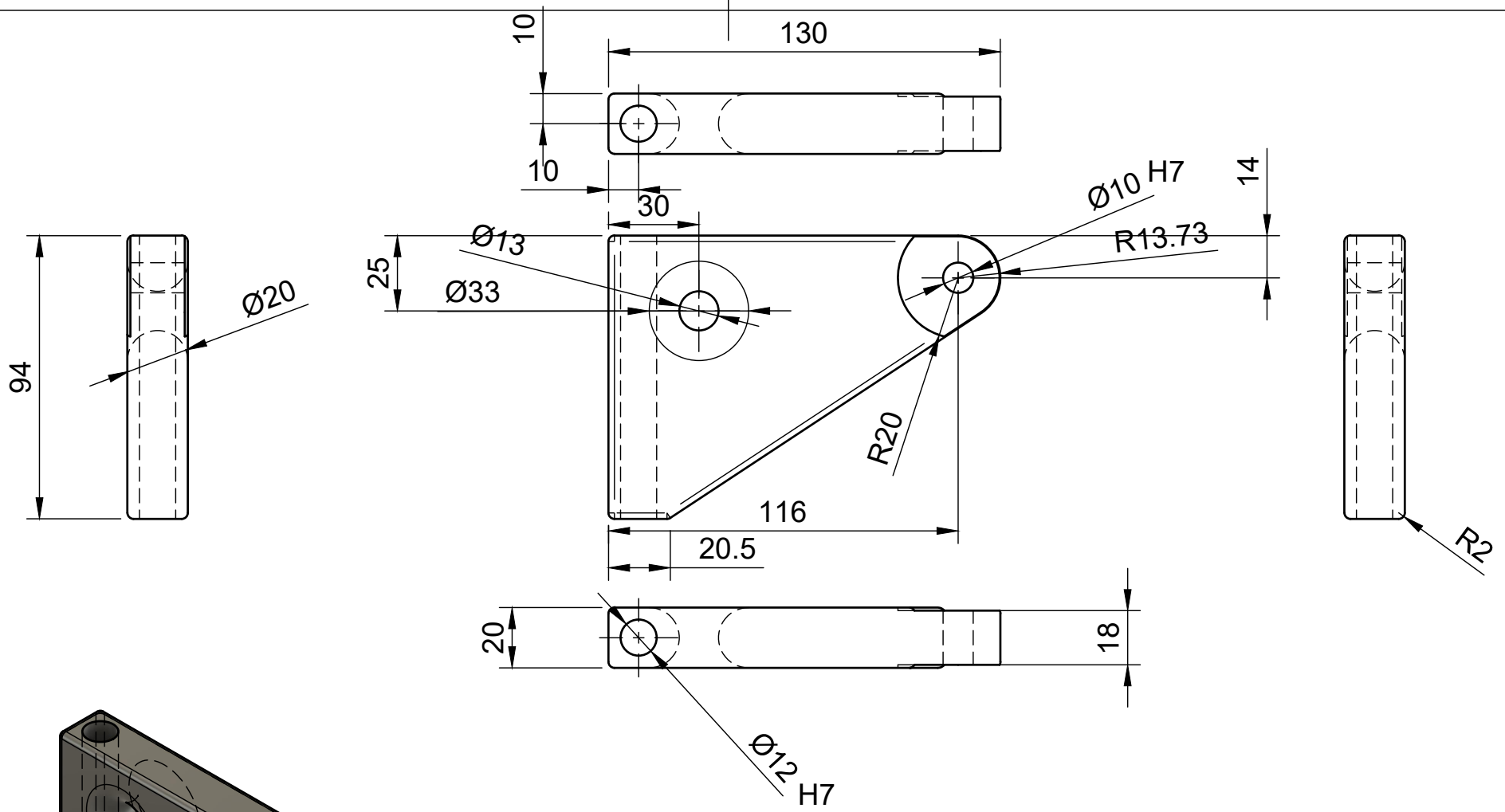

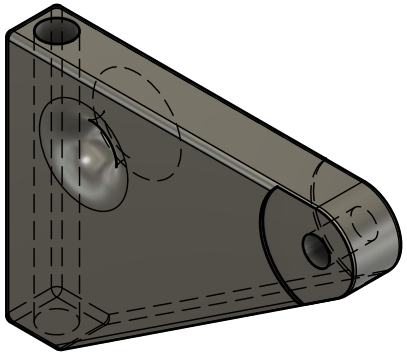

Dept.	Technical reference	Created by Franck LE MERRER 04/02/2024	Approved by	
Matière : Aluminium		Document type	Document status	
		Title Vit de mulet First 26	DWG No.	
			Rev. / Date of issue	Sheet 1/1