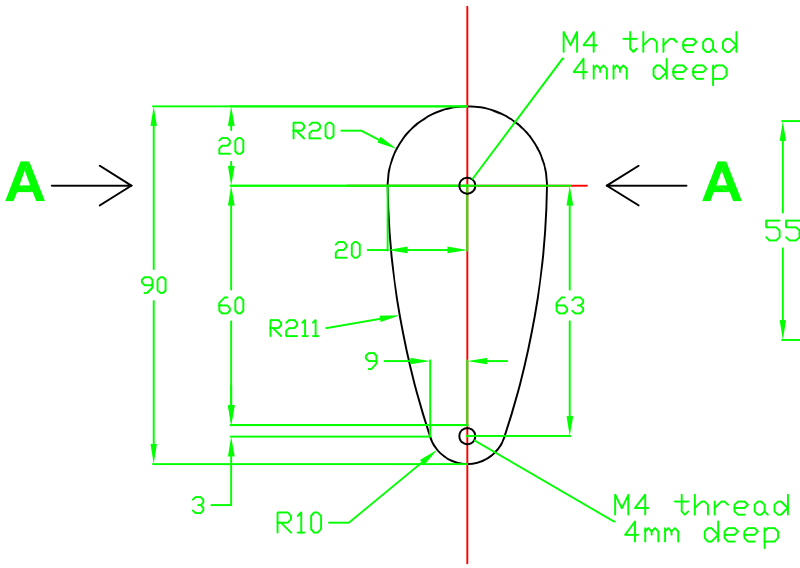

Full cylinder cross view before cut AA

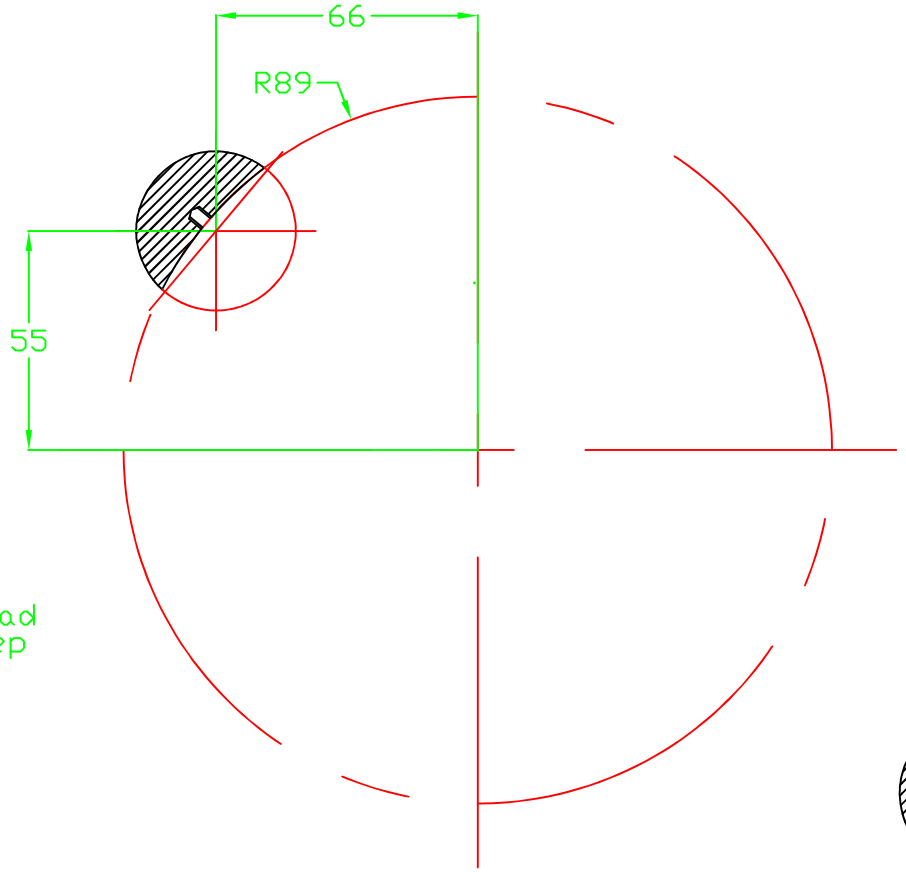

View A-A

All dimensions in mm
Material: aluminium