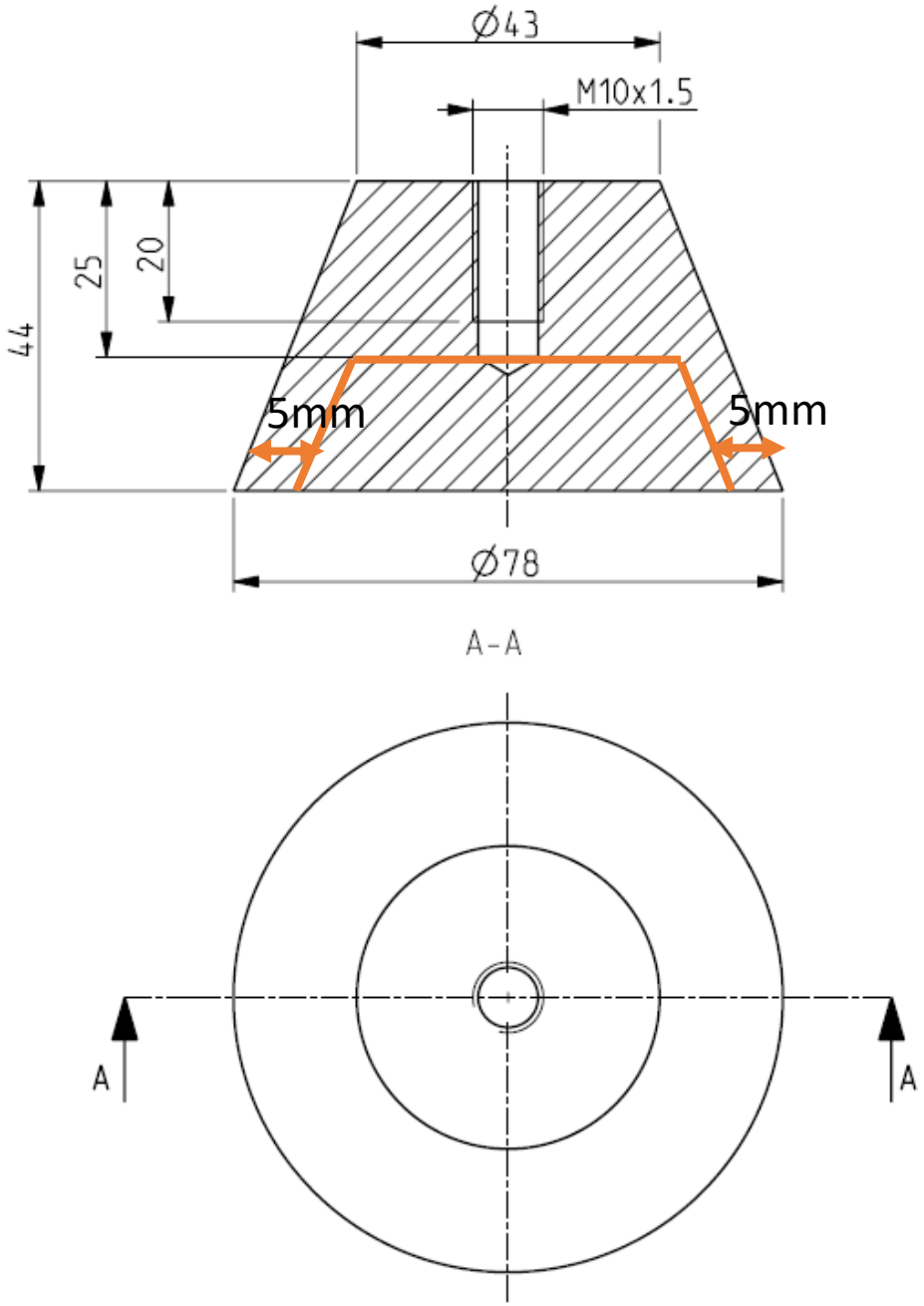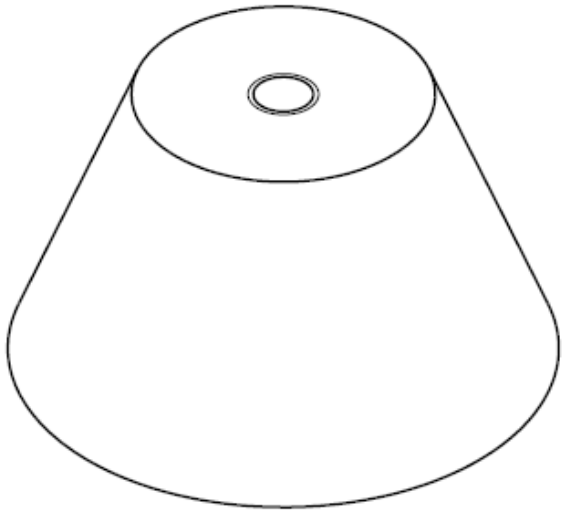
Ø43
M10x1.5
44
25
20
5mm
5mm
Ø78
A-A
A
A