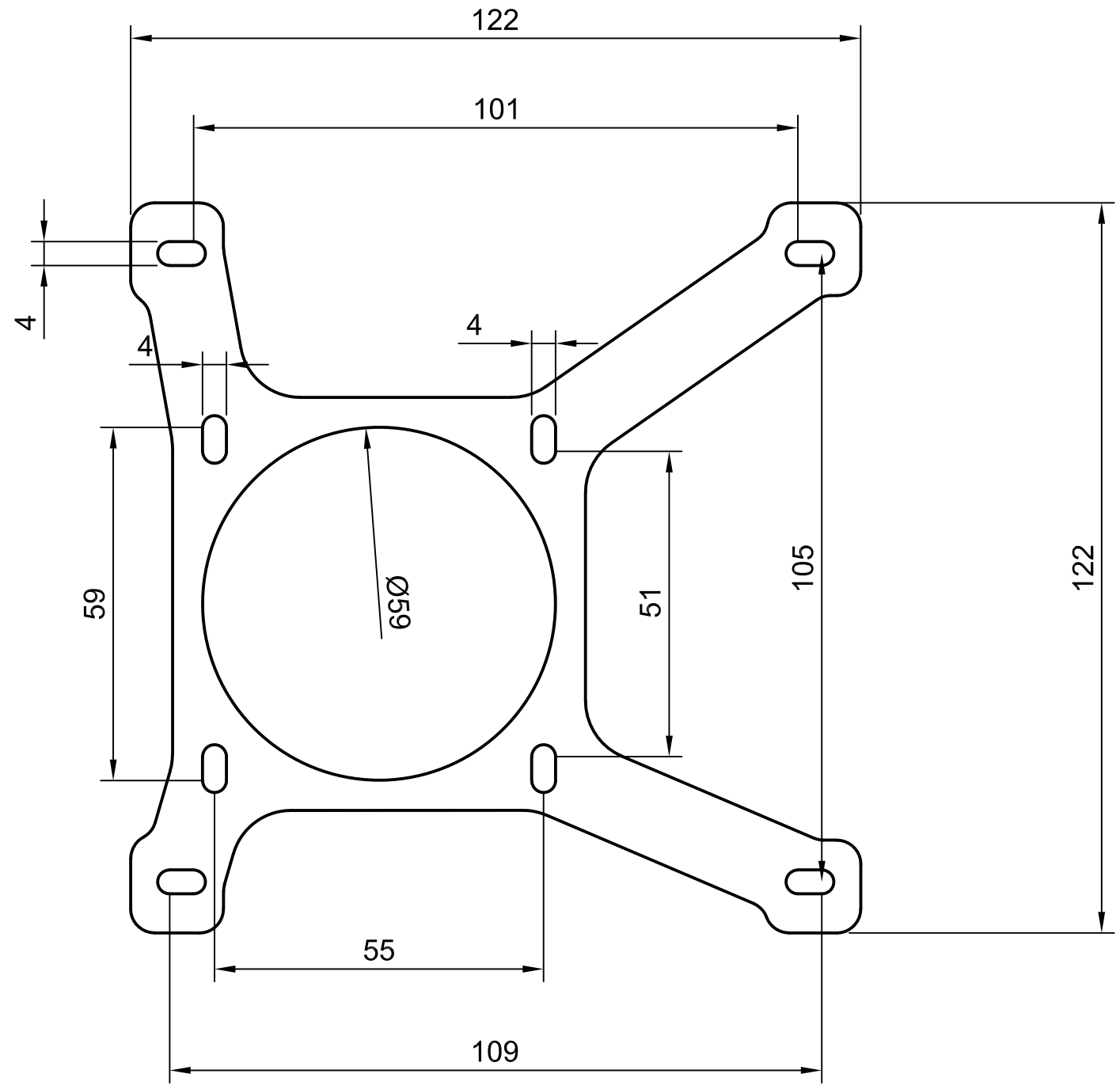


| Dept. | Technical reference | Created by NA 13/11/2021 | Approved by |
|---|---|---|---|
| | | Document type | Document status |
| | | Title<br>Support pompe | DWG No. |
| | | | Rev. / Date of issue / Sheet 1/1 |