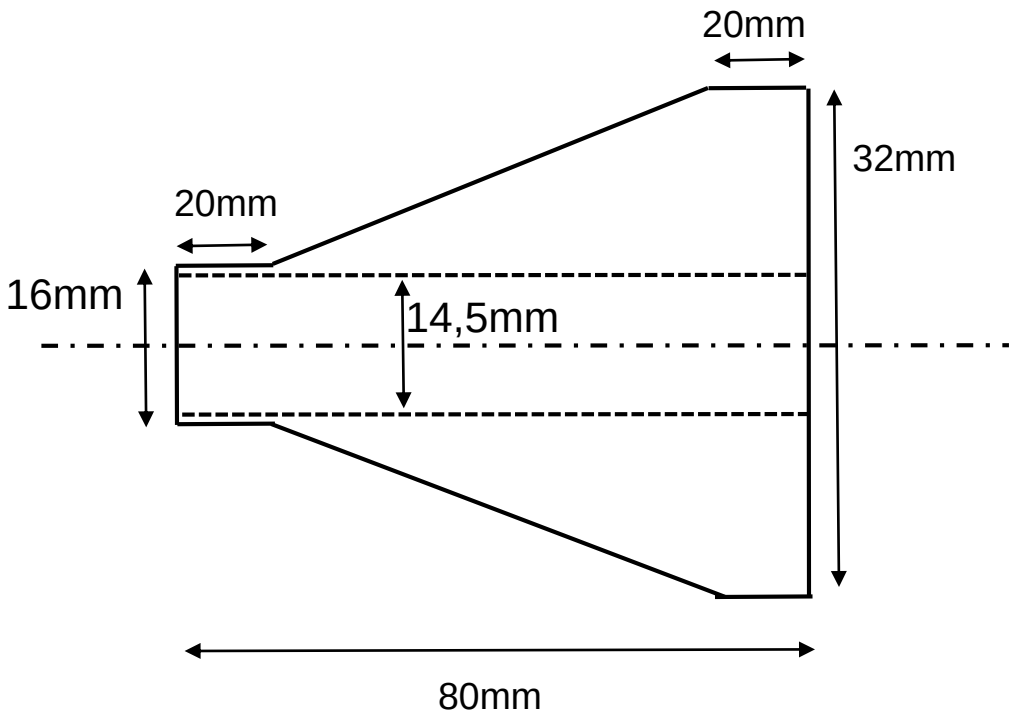
20mm
32mm
20mm
16mm
14,5mm
80mm

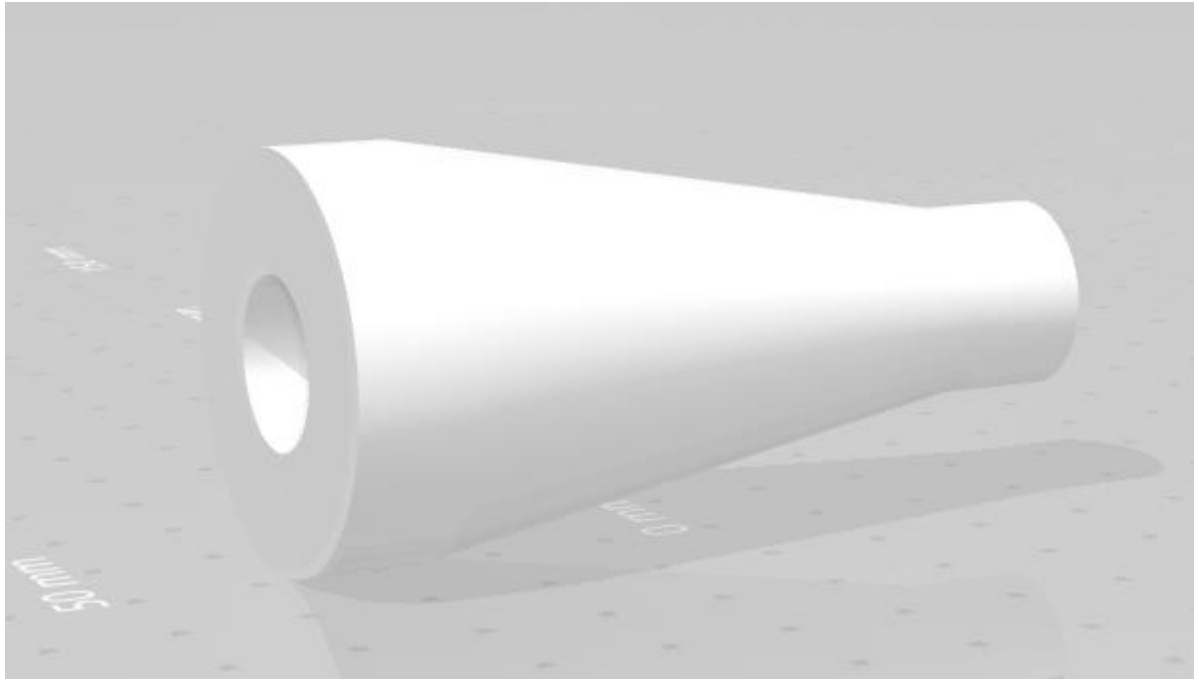
50 mm
0 mm
4
40 mm

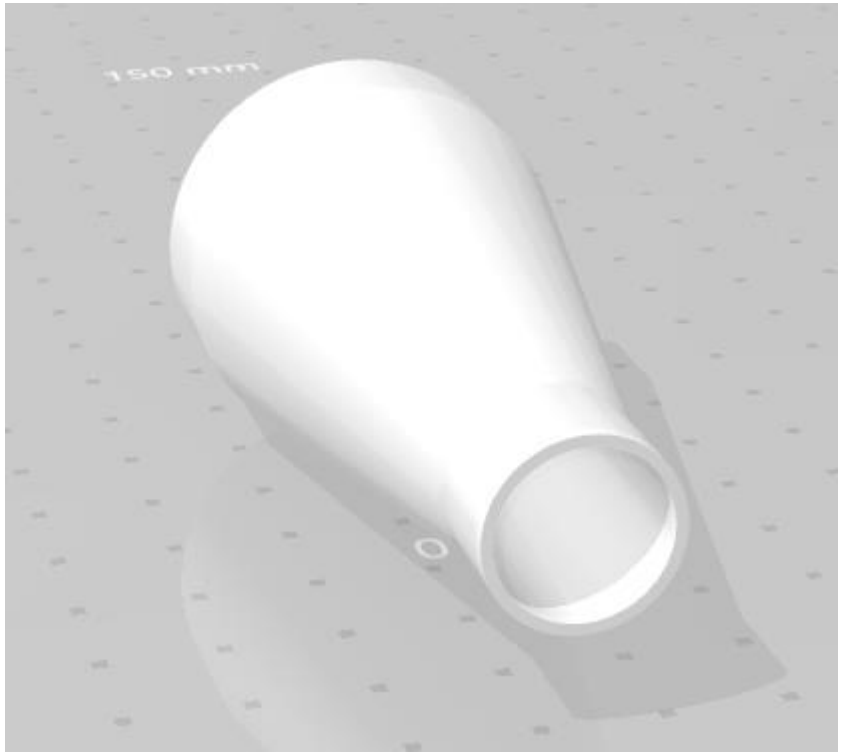
150 mm
0