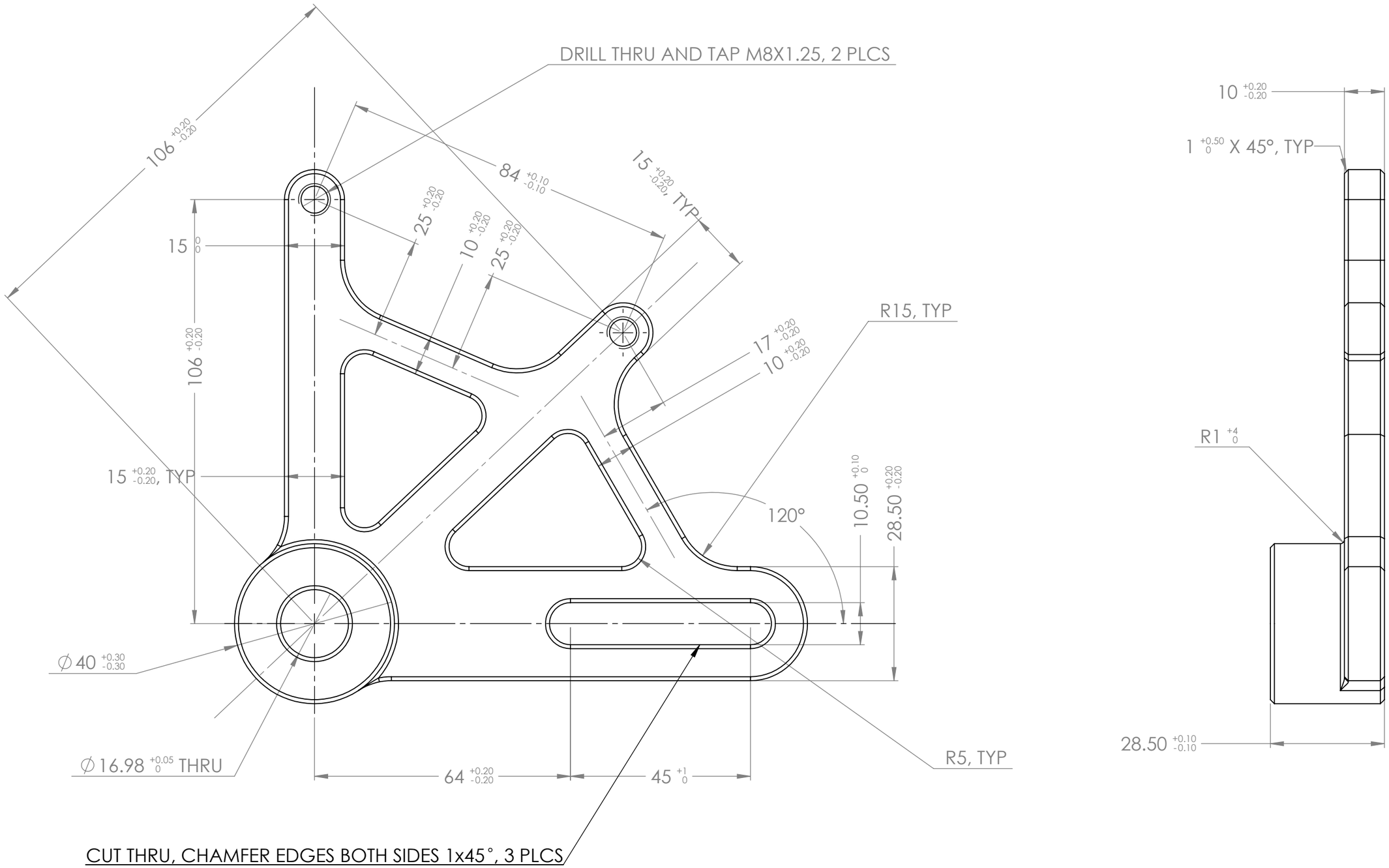

TITLE: CARRIER, REAR CALIPER	
MATERIAL: AL 6061-T6	TREATMENT: CLEAR DECORATIVE ANODIZE
SCALE:1:1	