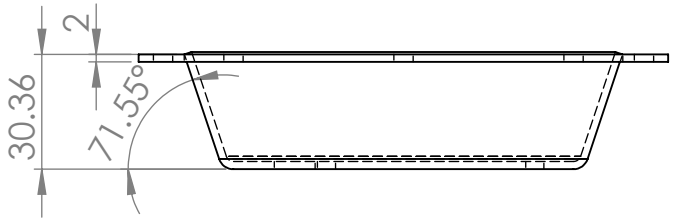
2
30.36
71.55°

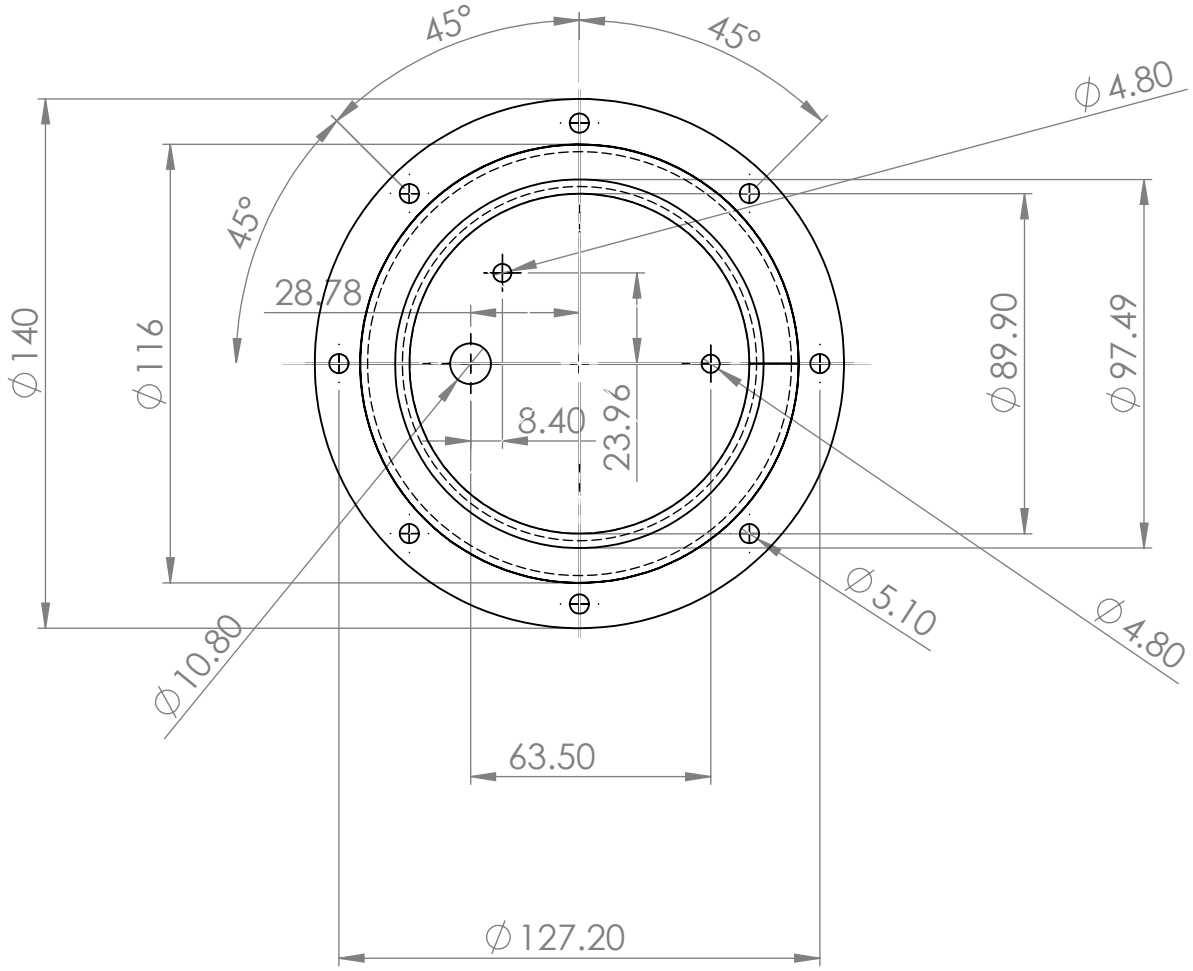
45°
45°
45°
∅4.80
∅140
∅116
28.78
8.40
23.96
∅89.90
∅97.49
∅5.10
∅4.80
∅10.80
63.50
∅127.20