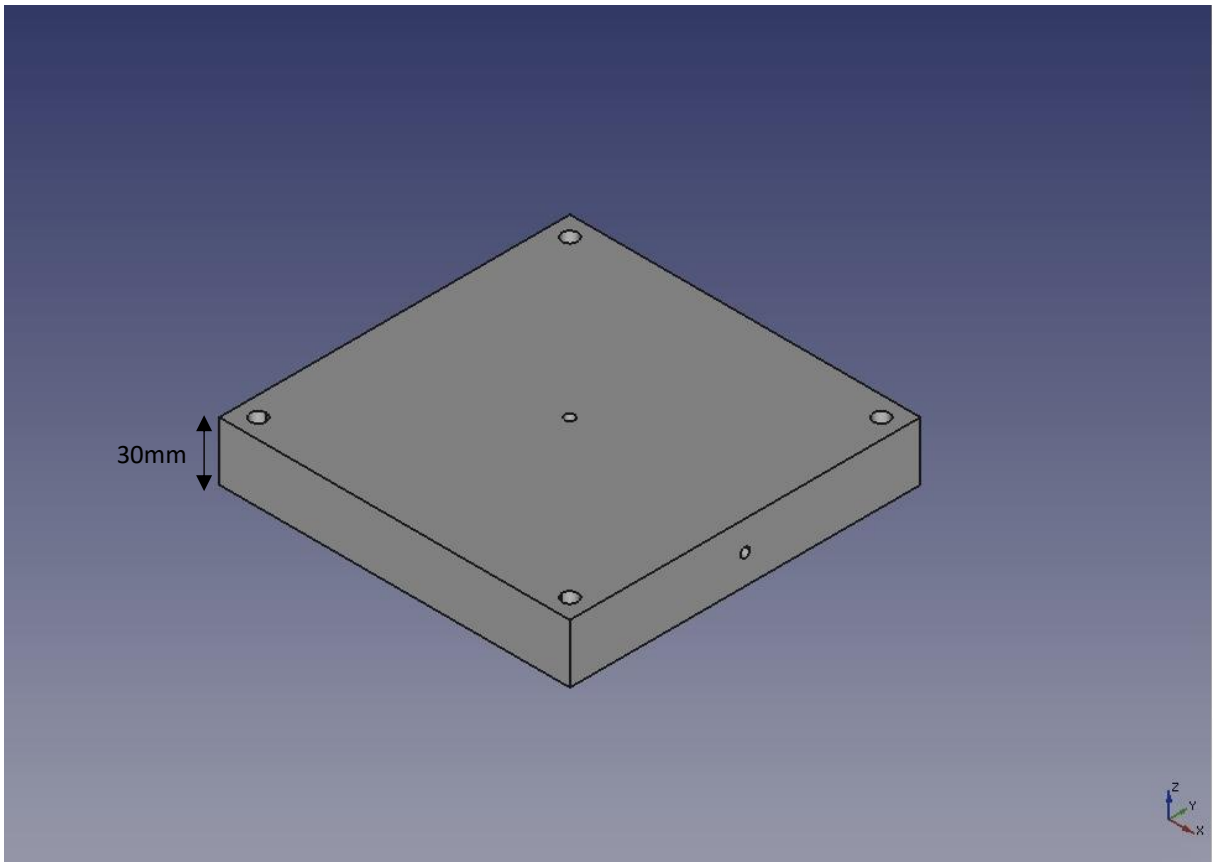
30mm

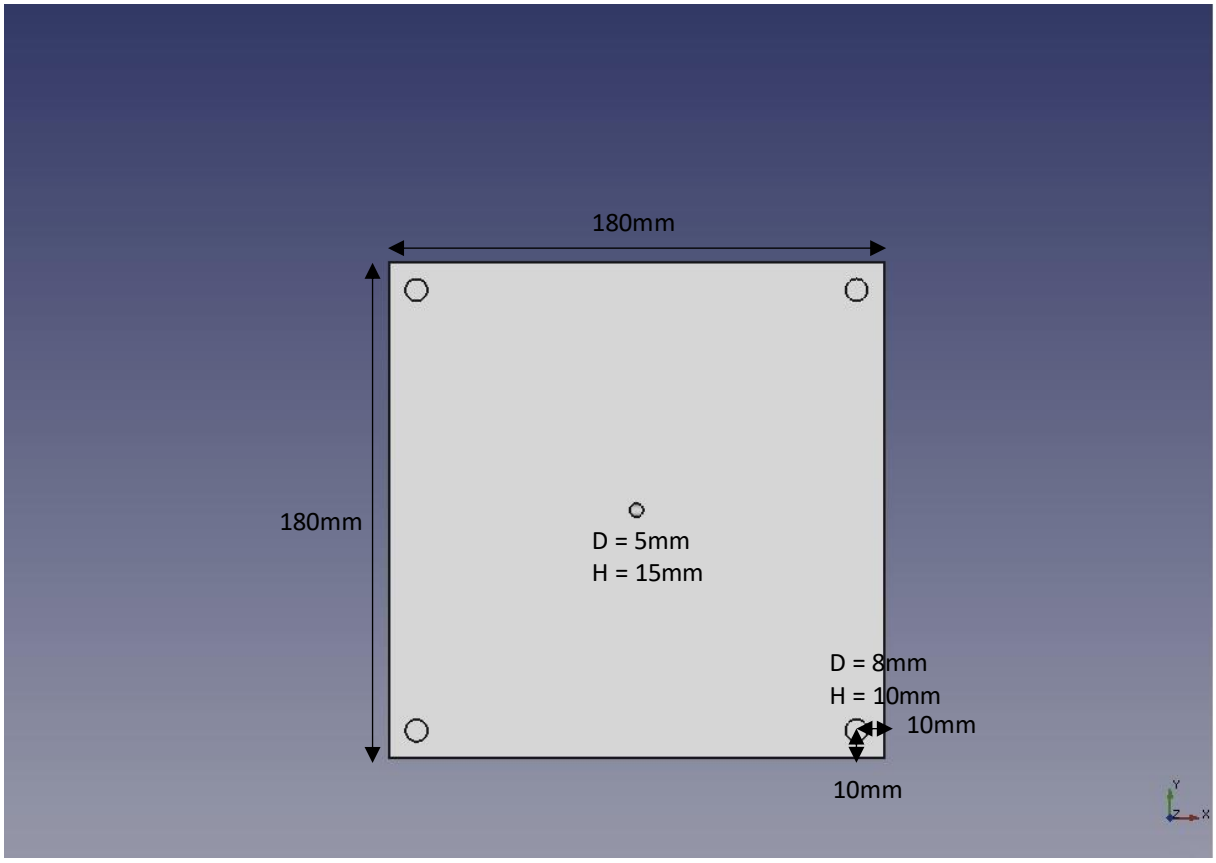
180mm
180mm
D = 5mm
H = 15mm
D = 8mm
H = 10mm
10mm
10mm

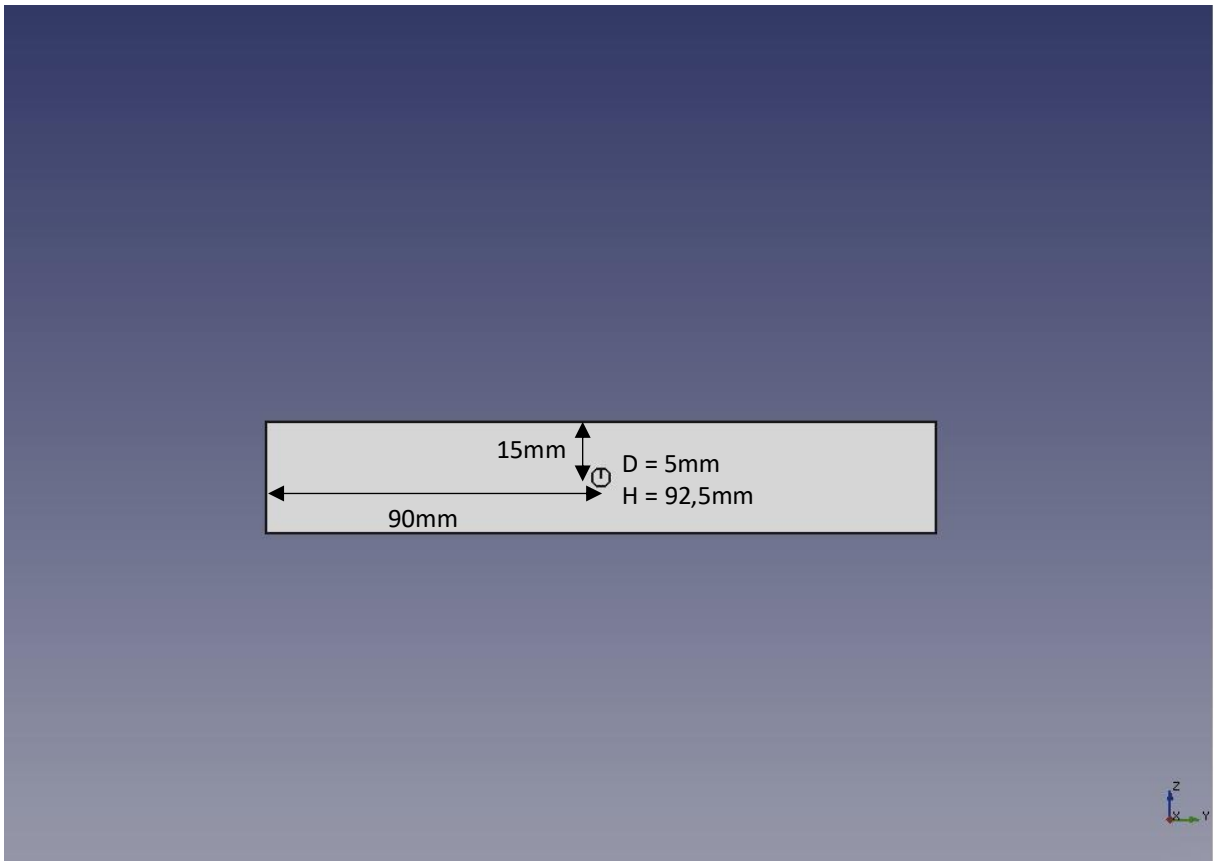
15mm
D = 5mm
H = 92,5mm
90mm
Z
X
Y