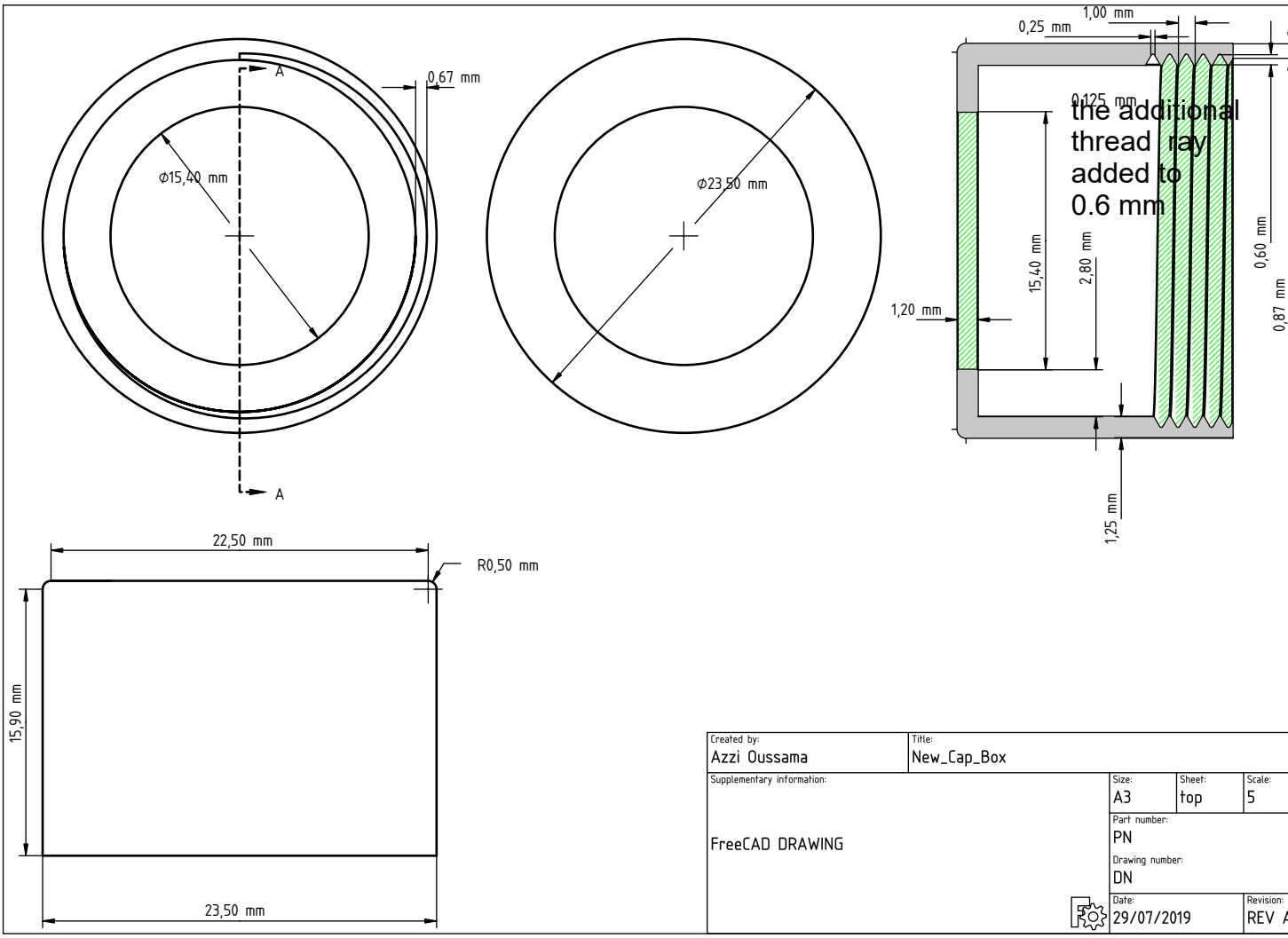

Created by: Azzi Oussama	Title: New_Cap_Box			
Supplementary information: FreeCAD DRAWING	Size: A3	Sheet: top	Scale: 5	
	Part number: PN			
	Drawing number: DN			
	Date: 29/07/2019		Revision: REV A	