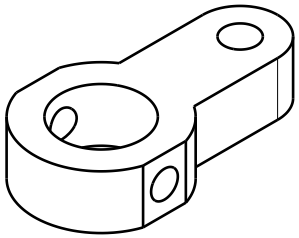

Vue isométrique
Echelle : 1:1

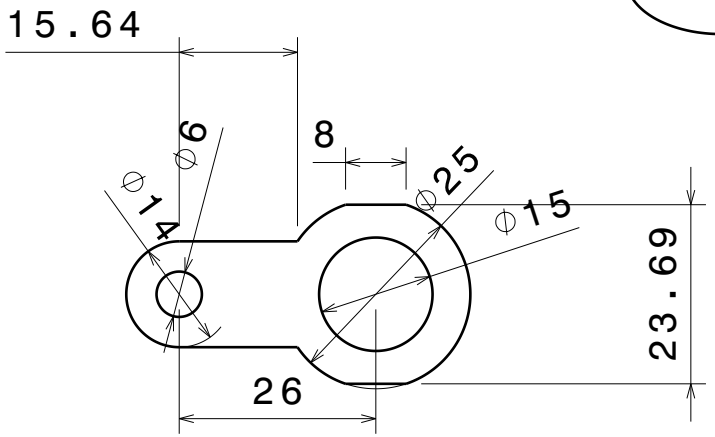

Vue de face
Echelle : 1:1

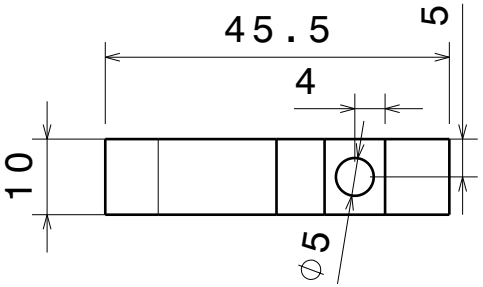

Vue de dessus
Echelle : 1:1

DESIGNED BY: PV3e DATE: 29/01/2017	Excentrique		
CHECKED BY: XXX DATE: XXX			
SIZE A4	PV3e		
SCALE 1:1	WEIGHT (kg) 0.01	DRAWING NUMBER Part1	SHEET 1/1

This drawing is our property; it can't be reproduced or communicated without our written agreement.

I	_
H	_
G	_
F	_
E	_
D	_
C	_
B	_
A	_